SOMMATORI

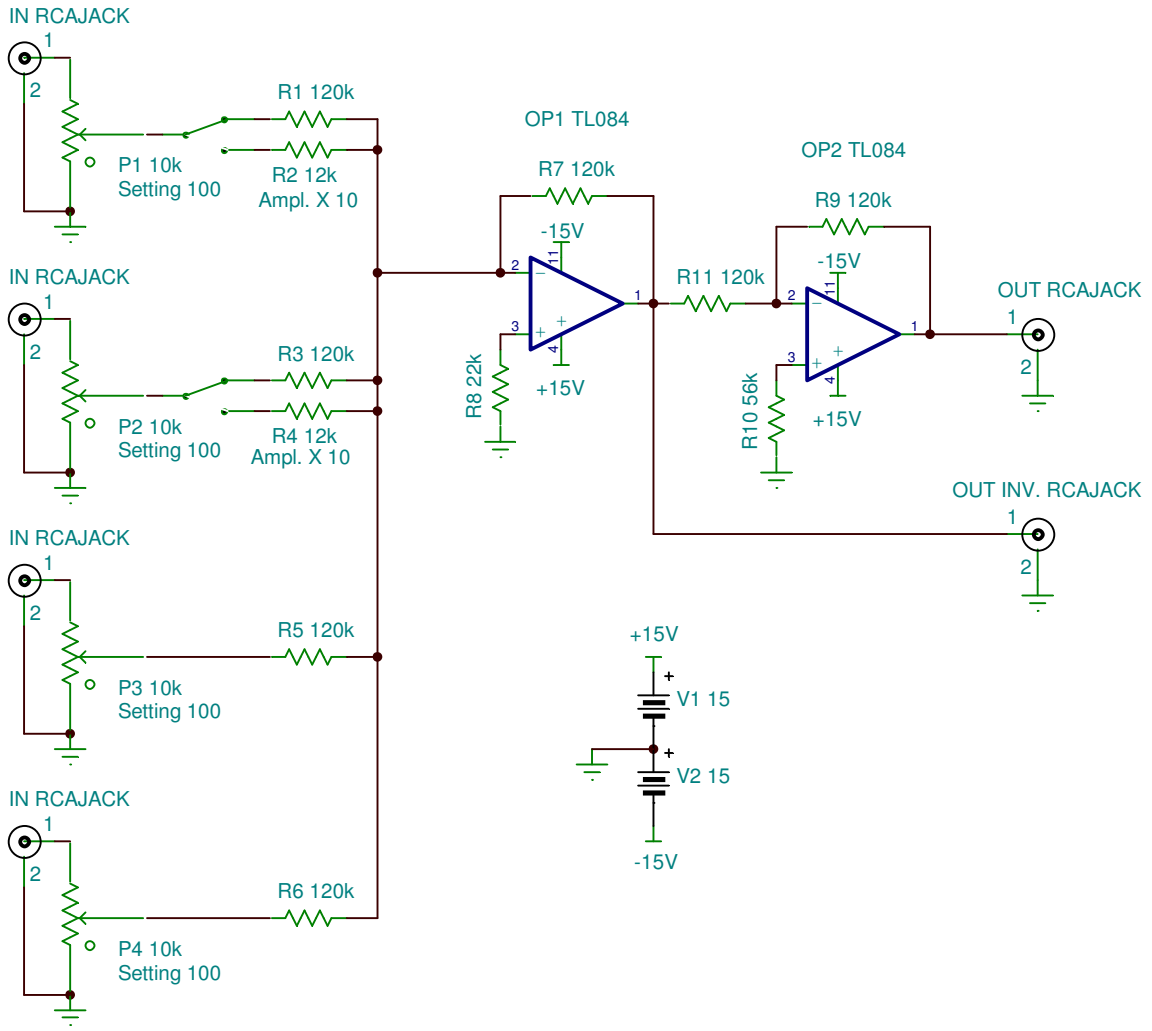
IN RCAJACK
P1 10k
Setting 100
R1 120k
R2 12k
Ampl. X 10
IN RCAJACK
P2 10k
Setting 100
R3 120k
R4 12k
Ampl. X 10
IN RCAJACK
P3 10k
Setting 100
R5 120k
IN RCAJACK
P4 10k
Setting 100
R6 120k
OP1 TL084
R7 120k
-15V
+15V
R8 22k
R11 120k
OP2 TL084
R9 120k
-15V
+15V
R10 56k
OUT RCAJACK
OUT INV. RCAJACK
+15V
V1 15
V2 15
-15V

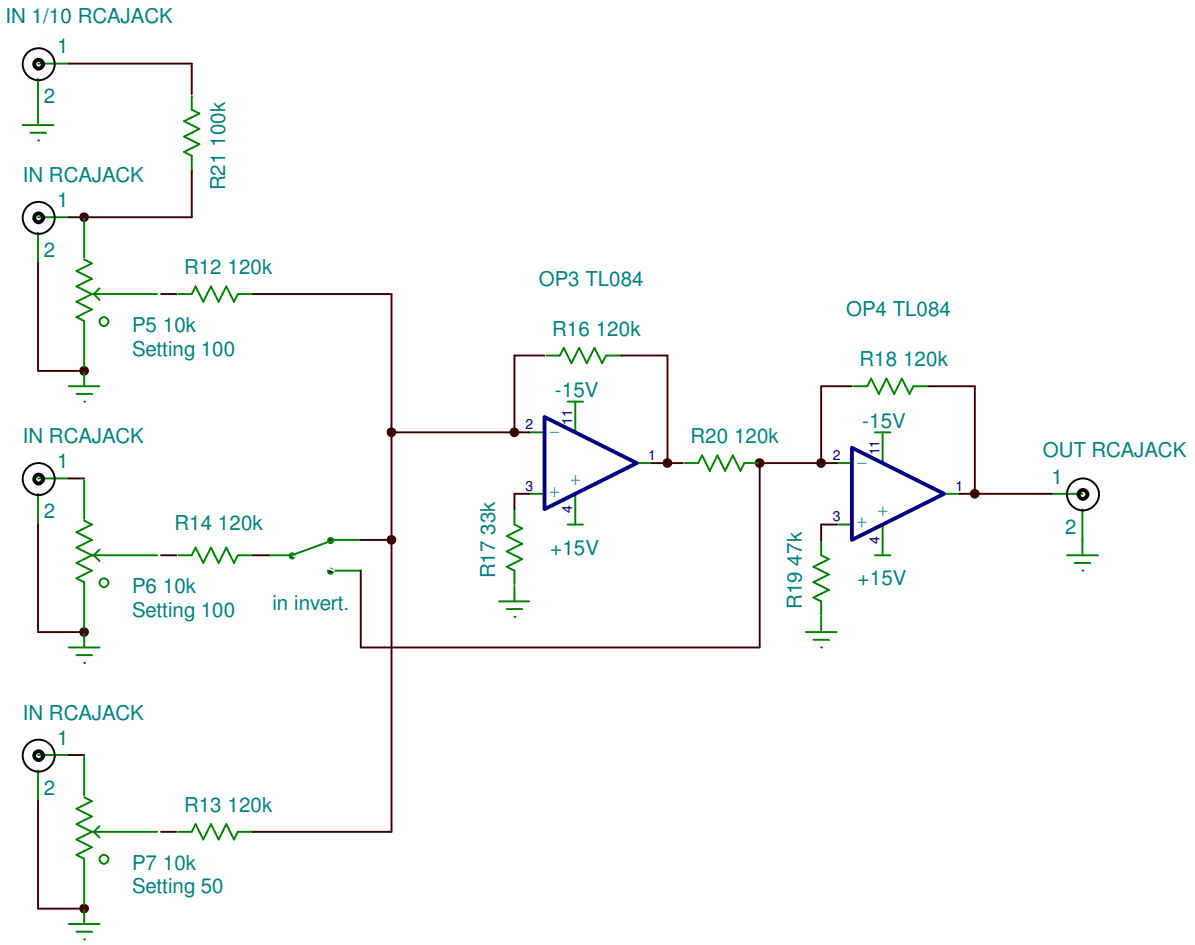
IN 1/10 RCAJACK
R21 100k
IN RCAJACK
P5 10k
Setting 100
R12 120k
IN RCAJACK
P6 10k
Setting 100
R14 120k
in invert.
IN RCAJACK
P7 10k
Setting 50
R13 120k
OP3 TL084
R16 120k
-15V
+15V
R17 33k
R20 120k
OP4 TL084
R18 120k
-15V
+15V
R19 47k
OUT RCAJACK